Autodesk

卷册检索号 SEARCH NO. OF THE VOLUME
MLHVDC-LCS-ECI-DD-CS-0501 30-B003701S-T0501

图纸文件目录（首页）

CATALOG OF DRAWING DOCUMENTS (HEAD PAGE)

拉合尔±660kV换流站 工程 施工图 阶段
±660kV Lahore Converter Station PROJECT Detail Design DESIGN STAGE

结构 专业 第 05 卷 第 01 册
Structure SPECIALITY VOLUME BOOK

卷册名称 工业水池图
Volume name Drawings of industry pool

批 准 APPROVED BY	
审 核 REVIEWED BY	
设计/勘测 DESIGNED BY/ SURVEYED BY	刘康平
图 纸 6 张 DRAWING NOS.	打印件 0 本 PRINTED COPIES NOS.

序号 No.	图 号 DRAWING NO.	文 件 名 称 DOCUMENT TITLE	版本 EDITION	张 NOS.	本 NOS.	备注 REMARKS
1	30-B003701S-T0501-001	地下构筑物结构设计说明 Specification of structural design for underground structures	A	1		
2	30-B003701S-T0501-002	工业水池底面布置图 Bottom of industrial pool	A	1		
3	30-B003701S-T0501-003	工业水池顶面布置图 Top of industrial pool	A	1		
4	30-B003701S-T0501-004	工业水池剖面图 Cross-section of industrial pool	A	1		
5	30-B003701S-T0501-005	工业水池配筋图 Industrial pool reinforcement details	A	1		
6	30-B003701S-T0501-006	钢梯图 Ladder details	A	1		

注:

Autodesk
Autodesk
Autodesk

设 计 总 说 明

1、本构筑物设计依据：水工提资及地质勘测报告、国家规范规程。
2、场地-0.300相当于绝对标高193.40,室内±0.000相当于绝对标高193.70(EGM2008高程系统)。
如无特别说明，本工程标高均采用相对标高。
3、采用巴基斯坦UTM-43N平面坐标系，相对平面坐标以米(m)为单位，尺寸以毫米(mm)为单位。
4、根据《巴基斯坦建筑规范》(2007)，换流站属于ZONE 2A区，场地土类型为SD类。根据巴基斯坦
地面峰值加速度图，地面峰值加速度为0.14g,相当于国内地震基本烈度为7度。
5、设计使用年限50年。
6、设计荷载：地面活荷载10kN/m²。
7、基础底应置于良好土层上，如遇不良地基请及时通知设计院。施工期间应注意采取措施防止构筑物上浮。
8、混凝土标号：fc'=28MPa，技术要求：(1)水胶比不大于0.50，(2)氯离子含量不大于0.1%，
(3)水泥型号应满足ACI-318-14表19.3.2.1中暴露类别S1对应水泥
(Cementitious materials-Types)的要求，(4)抗渗等级0.8MPa，(5)掺矿物掺合料。
混凝土垫层fc'=21MPa。钢筋Φ代表Grade 60 钢，技术要求：应满足ASTM A706, Grade 60[420]
变形钢筋或满足ACI 318-14第20.2.2.5节要求的ASTM A615, Grade 60[420]变形钢筋。
钢筋的抗拉强度实测值与屈服强度实测值的比值不应小于1.25；钢筋的屈服强度实测值与
屈服强度标准值的比值不应大于1.3，且钢筋在最大拉力下的总伸长率实测值不应小于9%。
钢筋Φ代表Grade 40，钢材Q235B，电焊条E43XX，焊缝高度Hf=h_{min}。
所有外露铁件均热镀锌防腐，焊伤处防锈漆一道，银粉漆二道。
导流墙：墙厚230mm，f'm=15MPa 机制粘土烧结砖，f'g=12.4MPa M类水泥砂浆砌筑；
砌体与池壁、柱之间采用2Φ10@500拉筋连结，拉筋伸入砌体长度1000mm。
外包墙：墙厚230mm，f'm=15MPa 机制粘土烧结砖，f'g=12.4MPa M类水泥砂浆砌筑；
墙体与构造柱间采用拉筋连结，构造柱两侧预埋2φ10@500拉结钢筋与砖墙连接，钢筋通长。
伸缩缝：采用30厚沥青木屑板填充。
落水管：采用φ110UPVC管。
9、粉刷：(1)水池内壁，支柱，顶板底面采用清水混凝土工艺。
(2)底板顶面，采用清水混凝土工艺。
(3)导流墙表面用1:2水泥砂浆抹面，厚15mm。
(4)外包墙及女儿墙贴面砖。
10、受力钢筋的混凝土保护层厚度
顶板上、下均为35mm；底板上为50mm，下为100mm；钢筋混凝土梁、柱50mm。
池壁50mm。
11、水池结构及人孔等配件按国标图纸05S804有关图纸施工。
12、施工要求：
(1)水池施工，安装及验收均应遵照现行建筑施工验收规范进行。
(2)混凝土：
(a)水池混凝土浇筑时必须振捣密实，不得漏振。
(b)池壁施工缝的位置可以设在以下二处：
<1>底板与池壁连接的斜托上部；
<2>顶板与池壁连接的斜托下部。
(c)浇筑水池混凝土前应将铁梯、墙管和吊攀等予埋件按图子先埋设牢固，防止浇筑混凝土时松动。
(d)在地下构筑物侧壁内外、底板上下分别涂抹两层厚度为10~12mm的聚合物水泥防水砂浆。
(3)施工期间注意基坑排水，防止水池上浮。
(4)水池土建完成以后，覆土回填工作应在试水合格后立即回填，
沿水池四周及池顶分层均匀回填，防止超填。顶板表面覆土时要避免大力夯打。
(5)水池抹面之前先做充水试验，充水分三次，每次充三分之一水深，每次充水结束稳定二天，观察和测定
渗漏情况，扣除管道的渗漏因素，24小时渗漏率应小于2L(m d)，根据观察到的渗漏，视具体情况修补。
(6)冬季施工应按有关规范规定执行。
(7)水池顶部植草绿化，以免覆土流失。
13、施工、安装及验收应遵照下列及相关的施工验收规范：
(1)<<混凝土结构工程施工质量验收规范>>GB50204-2011
(2)<<砌体结构工程施工质量验收规范>>GB50203-2011
(3)<<地下工程防水技术规范>>GB50108-2008
14、受拉钢筋的锚固长度 L_a(mm)：

钢筋种类	抗震等级	钢筋直径	混凝土强度fc'	
			21.0	28.0
		10	53d	52d
		13	53d	45d
		16	53d	45d
		19	53d	45d
		22	52d	45d
		25	52d	45d

注：
1.任何情况下，纵向受拉钢筋的锚固长度不应小于250mm。
2.当钢筋在混凝土施工过程中易受扰动时，表中锚固长度应乘以修正系数1.1。
3.纵向受拉钢筋末端采用弯钩或机械锚固措施时，包括弯钩或锚固端头
在内的锚固长度(投影长度)可取表中数字的0.6倍。
4.纵向受压钢筋的最小锚固长度不应小于表中数字的0.7倍。

15、纵向受压钢筋的最小搭接长度=0.7L_L，且≥200mm。

纵向受拉钢筋的搭接长度 L_L　　$L_L=L_aX$ 1.2 (≤25%) / 1.4 (50%) / 1.6 (100%)

括号内数字为纵向钢筋搭接接头面积百分率

Design General Specification

1、Design basis of this structure: Hydraulic capital and geological survey report, the national code of practice.
2、The site level of -0.300 is equal to the absolute elevation of193.40,The site level of ±0.000 is equal to the absolute elevation of193.70(geodestic datum system EGM2008).
If not specified,the elevations of the project are adopt to the relative elevation.
3、Using Pakistan UTM-43N plane coordinate system,the relative plane coordinates are in meters (m) and the dimensions are in millimeters (mm).
4、According to the "Pakistan Building Code" (2007), the converter station belongs to zone ZONE 2A and the site soil type is SD.According to Pakistan's ground peak acceleration map, the ground peak acceleration is 0.14g, equivalent to the basic earthquake intensity of 7 degrees.
5、Design life :50 years.
6、Design load:Floor live loads: 10kN/m².
7、The foundation should be placed in good stratum, in case of poor condition, please contact ECEPDI before the construction work started.Measures should be taken to prevent the building from floating during construction.
8、Strength grading of concrete: fc'=28MPa, technical requirements: (1)the water binder ratio is not greater than 0.50, (2)the content of chloride ion is not more than 0.1%, (3)the cement shall meet the requirements of the exposure category S1 in the Table 19.3.2.1 of ACI-318-14, corresponding to the cement (Cementitious, materials-Types), (4)the impermeability grade is 0.8MPa, (5)the mineral admixture is added.
The strength of concrete used in cushion is fc'=21Mpa.
Reinforcement Φ: ASTM A615 Grade 60, fy = 420MPa., technical requirements: (1)It shall meet the requirements of ASTM A706, Grade 60[420] deformed steel bars or meeting the requirements of section ACI 20.2.2.5 318-14.The ratio between measured tensile strength and measured value of yield strength should not be less than 1.25;The ratio between the measured yield strength and the standard value of yield strength should not exceed 1.3; The measured value of the total elongation at the maximum tensile force should not be less than 9%.
Reinforcement Φ: ASTM A615 Grade 40,,Steel: Q235B, welding rod:E43XX, weld height:Hf=h_{min}.
All exposed iron parts are hot-dip galvanized anti-corrosion,welding wound apply a antirust paint and two silver powder.
Guide wall: thickness 230mm, f'm=15MPa mechanism clay sintered brick, f'g=12.4MPa cement mortar masonry;
The masonry and pool wall or column are connected by tie bars 2Φ10@500,the length of the stretch into the masonry is 1000mm.
Outsourcing wall: thickness 230mm, f'm=15MPa mechanism clay sintered brick, f'g=12.4MPa cement mortar masonry;
The masonry and pool wall are connected by tie bars 2Φ10@500,the length of the stretch into the masonry is 1000mm.
Expansion joints:Filled with 30 thick asphalt board.
Downspouts:UPVC pipes adopted,the color is consistent with other buildings in the station.
9、Paint: (1)Fair-faced concrete technology was adopted on the Pool walls, pillars, roof bottom.
(2)Fair-faced concrete technology was adopted on Floor top.
(3)Guide wall surface was covered with 1: 2 cement mortar plaster.
(4)Outsourcing wall and parapet wall were covered with Brick.
10、The thickness of the protective layer of the reinforcement of different parts:
The top and bottom of the roof were 30mm; The top of the floor are 50mm,The bottom of the floor are 100mm ;
The reinforced concrete beam and column are 50mm;The pool walls are 50mm.
11、Pool structure and manhole and other accessories were built according to national standard drawings 05S804. and other related contents of the atlas implementation.
12、Construction requirements:
(1) Construction, installation and acceptance of ponds shall be conducted in accordance with the current code of acceptance of construction.
(2) Concrete:
(a)Concrete pouring pond must be vibrated dense.No leak vibration.
(b)Pool wall construction joints can be located in the following two locations:
<1>Skeleton upper support connected to the upper wall of the spire;
<2>Skeleton lower support connected to the upper wall of the spire;
(c)The stairs, wall pipe ,lifting and other embedded parts should be firmly embedded according to drawings before pouring pool concrete, To prevent embedded parts loosing when pouring pool concrete.
(d)Apply two layers of polymer cement waterproof mortar with a thickness of 10 ~ 12mm inside and outside the underground structure.
(3)Pay attention to excavation drainage during construction,in case to prevent the pool from floating.
(4)After the completion of the pool construction,Cover soil backfill should be tested immediately after the water backfill. Cover soil along the pool around the pool top and uniform layered backfill.Prevent overfill.Avoid aggressive ramming when top surface covered with soil.
(5)Make water test before filling the pool,Water filling three times,1/3 depth of water each time,keep two days after filling, Observe and measure leakage.Deducting the leakage of the pipeline, 24-hour leakage rate should be less than 2L(m d). According to the observed leakage,patching depending on the case.
(6)Winter construction should be implemented according to the relevant regulations.
(7)The top of the pool is planted with green grass so as to avoid soil loss.
13、Construction, installation and acceptance shall comply with the following and related construction acceptance specifications:
(1)<<Code for quality acceptance of concrete structure construction>>GB50204-2011
(2)<<Code for acceptance of constructional quality of masonry structures>>GB50203-2011
(3)<<Technical code for waterproofing of underground works>>GB50108-2008
14、The anchorage length of longitudinal tensile reinforcement:

Type of bar	Class of seismic measure	Diameter of bar	Concrete strength fc'	
			21.0	28.0
		10	53d	52d
		13	53d	45d
		16	53d	45d
		19	53d	45d
		22	52d	45d
		25	52d	45d

Notes:
1. In any case, the anchorage length of the longitudinal tensile bar shall not be less than 250mm .
2.When the end of longitudinal tensile bar is bent or mechanically anchored, The anchor length (projection length) including the hook or anchor end,is 0.6 times the figure in the table.
3.The minimum anchorage length of longitudinally compression bar shall not be less than 0.7 times the figures in the table.

15、When the longitudinal compressive bar is overlapped, the compressive lap length shall not be less than 0.7 times of the length of the longitudinal tensile bar, and shall not be less than 200mm in any case.

The lashing lap length of longitudinal tensile bars L_L　　$L_L=L_aX$ 1.2 (≤25%) / 1.4 (50%) / 1.6 (100%)

The numbers in brackets are the percentage of overlap area of the bars in the same connecting section

16、Related atlas and drawings:

Plumbing details	National Building Standard Design Gallery 05S804 P172
Insulation access holes and stainless steel cover details	National Building Standard Design Gallery 05S804 P174
Type D/E/F Sucker hole details	National Building Standard Design Gallery 05S804 P176
Vents and Type A Ventilation tube details	National Building Standard Design Gallery 05S804 P177
Ladder details	National Building Standard Design Gallery 05S804 P179
Cased hole reinforcement details	National Building Standard Design Gallery 05S804 P185
Level gauge embedded pipe fittings details	National Building Standard Design Gallery 05S804 P186
General Information	National Building Standard Design Gallery 05S804 P6-9

16、套用图集及图纸：

水管吊架详图	国家建筑标准设计图集05S804 P172
保温检修孔及不锈钢盖板详图	国家建筑标准设计图集05S804 P174
D、E、F型吸水坑详图	国家建筑标准设计图集05S804 P176
通风孔及A型通风管详图	国家建筑标准设计图集05S804 P177
铁梯大样图	国家建筑标准设计图集05S804 P179
套管洞加固详图	国家建筑标准设计图集05S804 P185
液位仪预埋管件详图	国家建筑标准设计图集05S804 P186
总说明	国家建筑标准设计图集05S804 P6-9

Reference Drawings

Drwg. No.	Title

Revisions

	Name	Date	Notes

巴基斯坦默蒂亚里—拉合尔±660kV直流输电工程
±660kV HVDC Project from Matiari to Lahore in Pakistan

NATIONAL TRANSMISSION & DESPATCH COMPANY (NTDC) LIMITED PAKISTAN

CONTRACTOR 国家电网 STATE GRID 中国电力技术装备有限公司 CHINA ELECTRIC EQUIPMENT & TECHNOLOGY CO.,LTD.

SUBCONTRACTOR East China Electric Power Design Institute Co.,Ltd.

拉合尔±660kV换流站
±660kV Lahore Converter Station

设计阶段 PHASE：施工图 Detail Design

MLHVDC-LCS-ECI-DD-CS-050 1-001A

	姓名 Name	日期 Date
设计 Designed	刘康宁	2018.01.26
校核 Checked	刘强 邱孟春	
审核 Reviewed	邱孟清	
批准 Approved	杨志彦	
比例 Scale	1:100	图号 DWG NO. 30-B003701S-T0501-001

地下构筑物结构设计说明
Specification of structural design for underground structures

版本 REV. A

专业 Speciality	会签 Sign	日期 Date
水工	尹	

594X841

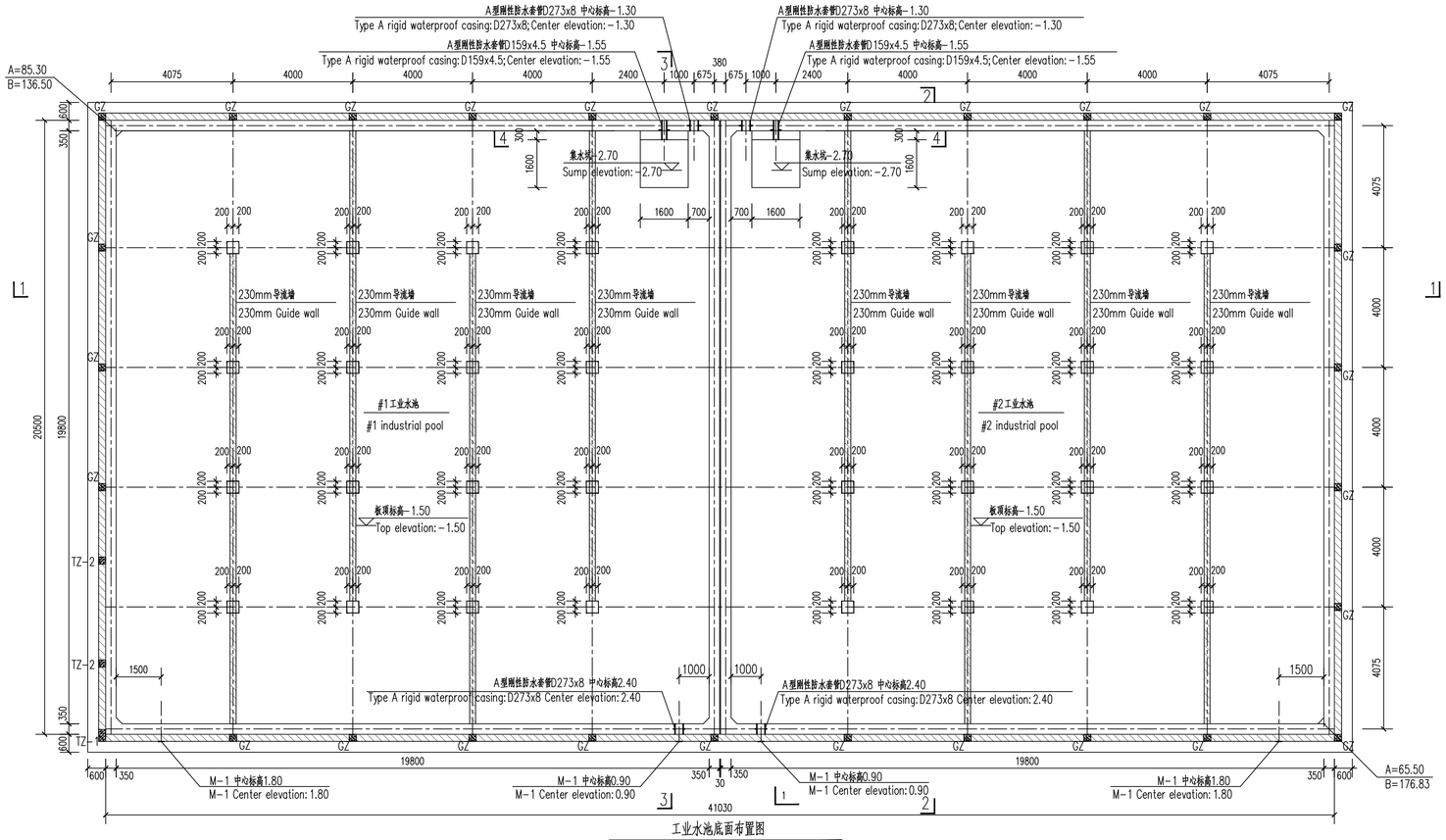

工业水池底面布置图

Layout for bottom of industrial pool

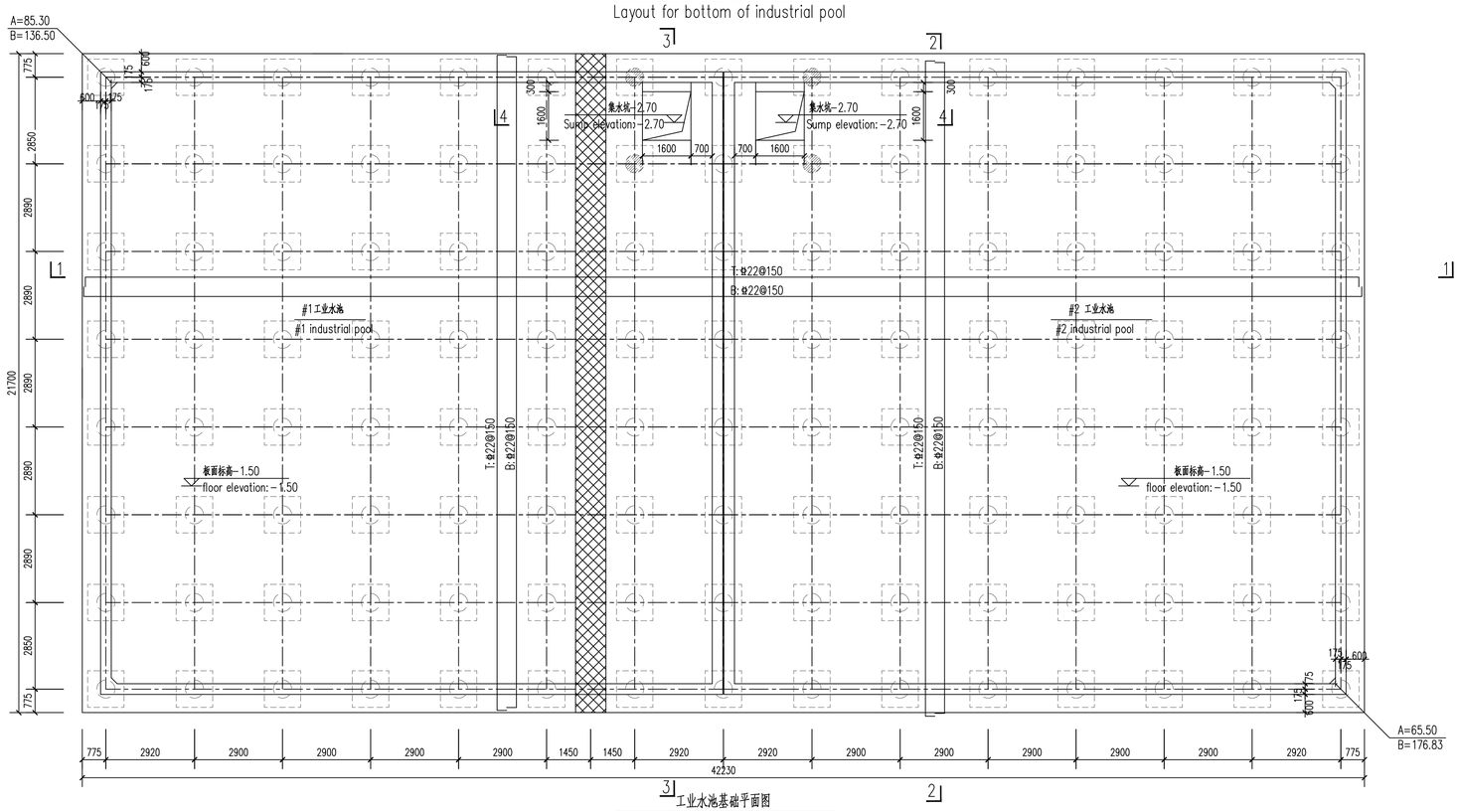

工业水池基础平面图

Plan of industrial pool foundation

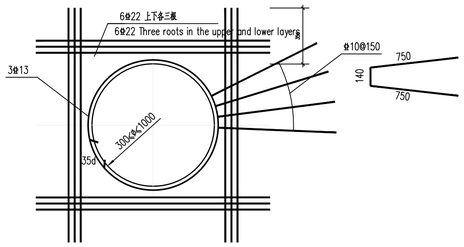

孔洞处加固图

Reinforcement details at hole

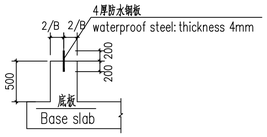

施工缝节点

Construction joints

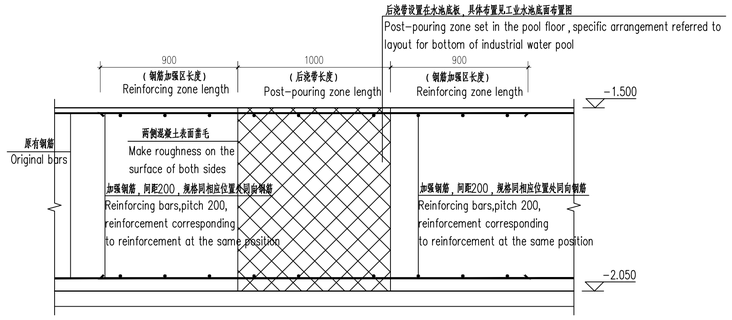

后浇带 1:20

Post-pouring zone

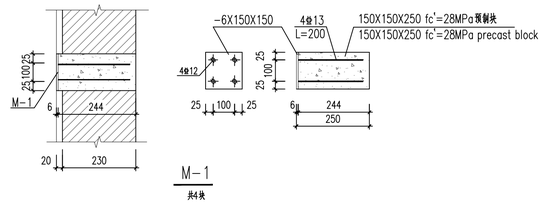

M-1 共4块

说明：

1. 场地-0.300相当于绝对标高193.40,±0.000相当于绝对标高193.70(EGM2008高程系统)。如无特别说明，本工程标高均采用相对标高。
2. 水池底板的后浇带具体做法要求参见图集05S804第9页。

Specification :

1. The site level of -0.300 is equal to the absolute elevation of193.40,The site level of ±0.000 is equal to the absolute elevation of193.70(geodestic datum system EGM2008).
   If not specified,the elevations of the project are adopt to the relative elevation.
2. Post-pouring zone requirements refer to Atlas 05S804 Page 9.

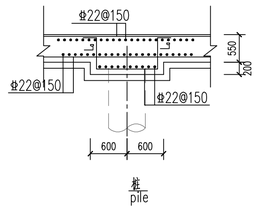

桩承台示意图

Diagram of pile caps

Reference Drawings

Drwg. No.	Title

Revisions

Name	Date	Notes

巴基斯坦默蒂亚里—拉合尔±660kV直流输电工程

±660kV HVDC Project from Matiari to Lahore in Pakistan

NATIONAL TRANSMISSION & DESPATCH COMPANY (NTDC) LIMITED PAKISTAN

CONTRACTOR 国家电网 STATE GRID 中国电力技术装备有限公司 CHINA ELECTRIC POWER EQUIPMENT AND TECHNOLOGY CO.,LTD.

SUBCONTRACTOR East China Electric Power Design Institute Co.,Ltd.

拉合尔±660kV换流站

±660kV Lahore Converter Station

设计阶段 PHASE: 施工图 Detail Design

M L H V D C - L C S - E C I - D D - C S - 0 5 0 1 - 0 0 2 A

	姓名 Name	日期 Date
设计 Designed	刘康宁	2018.01.26
校核 Checked	刘根 邵亮亮	
审核 Reviewed	吴儒清	
批准 Approved	杨小平	
比例 Scale	1:100	图号 DWG NO. 30-B003701S-T0501-002

版本 REV. A

工业水池底面布置图

Bottom of industrial pool

专业 Speciality	会签 Sign	日期 Date
水工		

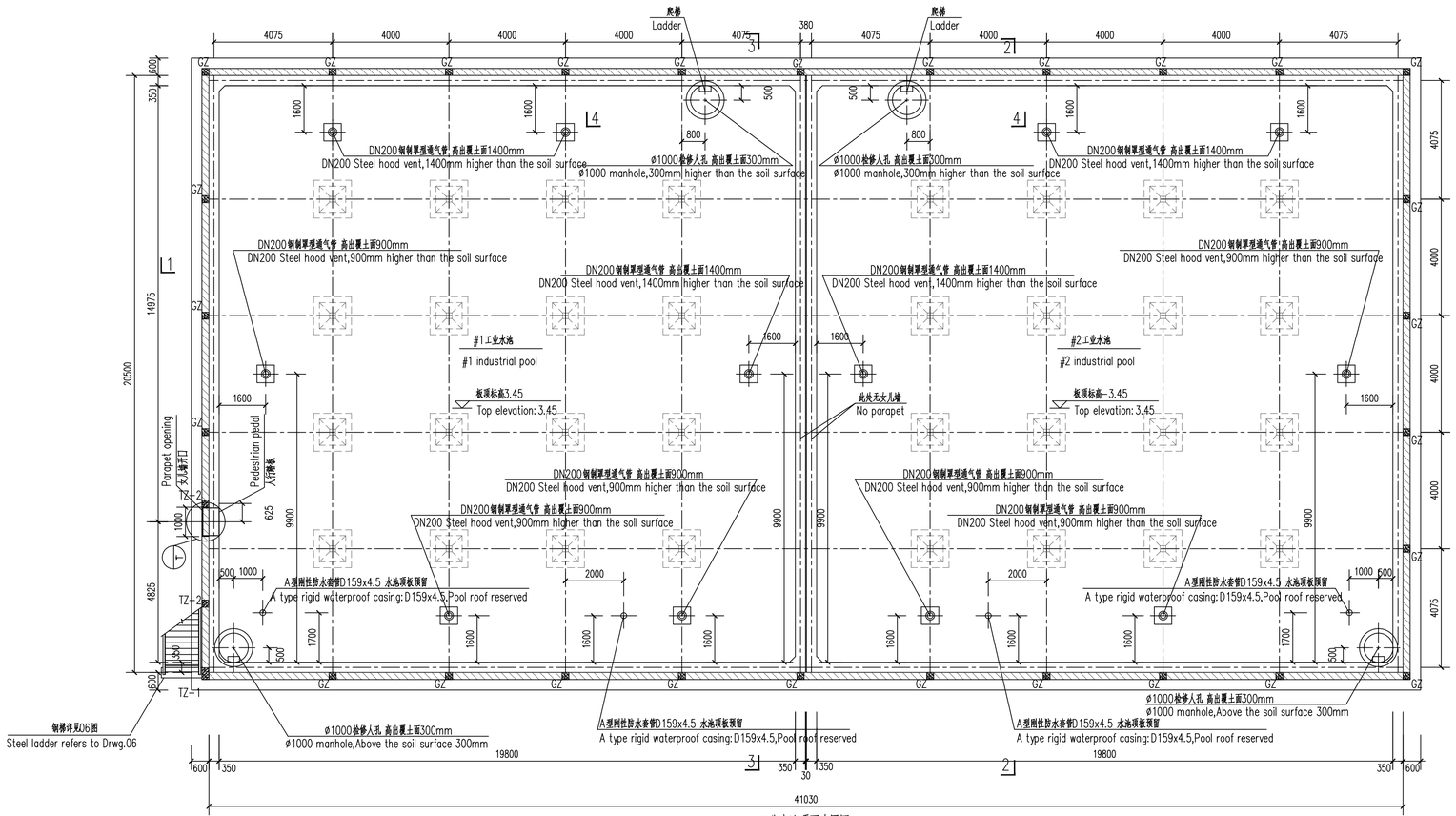

工业水池顶面布置图

Layout for top of industrial pool

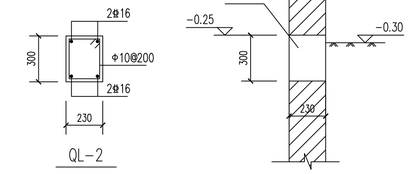

圈梁QL-2示意图

QL-2 Circle beam details

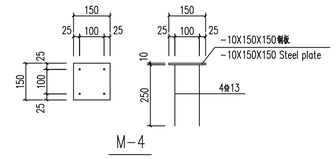

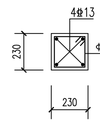

墙体构造柱GZ

Wall construction column GZ

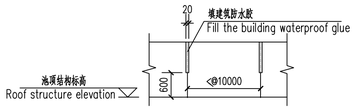

钢筋混凝土女儿墙伸缩缝详图

Details of reinforced concrete parapet joints

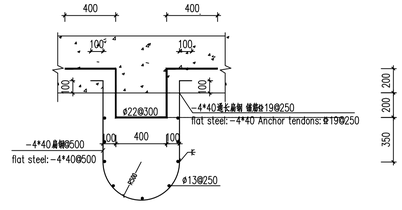

爬梯详图

Ladder details

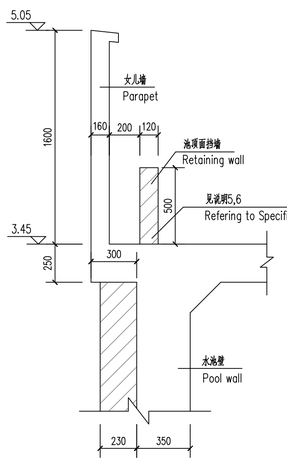

1-1

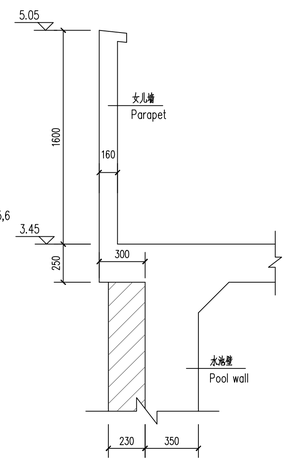

2-2

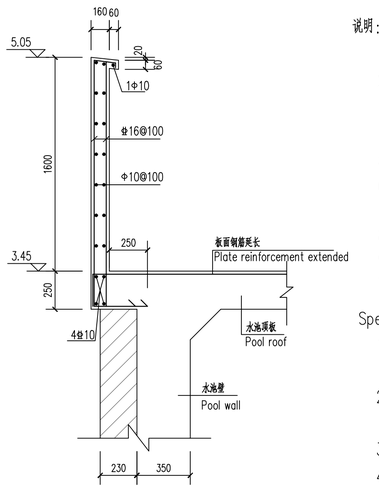

女儿墙配筋图

Parapet reinforcement details

说明:

1. 场地标高为-0.30m，相当于绝对标高193.40m(EGM2008高程系统)。如无特别说明，本工程标高均采用相对标高。
2. 伸缩缝做法参见国标图集14J936，墙面参见⑦/30，池顶参见⑦/21。
3. 池内导流墙墙顶距水池顶板底面200mm。
4. 水池顶覆±500mm厚，铺草皮。
5. 池顶面挡墙仅在水池顶面南、北两侧有，20厚1：2水泥砂浆粉刷。
6. 池顶面挡墙底部每5m预埋Φ100UPVC管泄水，管口设塑料篦子。
7. 钢制罩型通气管参见给水排水标准图集05S804页177,水池其它配件见国标05S804有关图纸。
8. 土建施工时,请和工艺部分图纸结合,以免遗漏有关埋件。
9. 水池维护墙四周做600mm宽散水坡，做法见卷册T0248-001。
10. 人孔做法参考图集05S804-174.

Specification:

1. The site level of -0.300 is equal to the absolute elevation of193.40(geodestic datum system EGM2008) If not specified,the elevations of the project are adopt to the relative elevation.
2. Expansion joint method refers to national standard atlas 14J936,wall painting refers to ⑦/30 ,tank top refers to ⑦/21.
3. The distance between the wall of the Guide wall and the roof of the pool is 200mm.
4. The pond is covered with 300mm thick soil and paved with sod.
5. The retaining wall on the top of the pool is only on the South and north sides of the top of the pool, and the 20 thick 1:2 cement mortar is painted.
6. The diameter of 100 UPVC pipe is pre buried at the bottom of the top wall of the pool top 5m,the nozzle is provided with a plastic comb
7. Craft practice of Steel hood vent refer to the relevant drawings of GB 05S804 P177; Other parts of the tank refer to the relevant drawings of GB 05S804.
8. In civil construction, please combine with the process drawings, so as not to miss the embedded parts.
9. The pool maintenance 600mm wide apron slope wall around, refering to T0248-001.
10. Manhole uses insulation practices,refers to altas 05S804-174.

水工		
专业 Speciality	会签 Sign	日期 Date

Reference Drawings

Drwg. No.	Title

Revisions

	Name	Date	Notes

巴基斯坦默蒂亚里—拉合尔±660kV直流输电工程

±660kV HVDC Project from Matiari to Lahore in Pakistan

NATIONAL TRANSMISSION & DESPATCH COMPANY (NTDC) LIMITED PAKISTAN

CONTRACTOR 国家电网 STATE GRID 中国电力技术装备有限公司 CHINA ELECTRIC POWER EQUIPMENT & TECHNOLOGY CO.,LTD.

SUBCONTRACTOR East China Electric Power Design Institute Co.,Ltd.

拉合尔±660kV换流站

±660kV Lahore Converter Station

设计阶段 PHASE: 施工图 Detail Design

M L H V D C - L C S - E C I - D D - C S - 0 5 0 1 - 0 0 3 A

	姓名 Name	日期 Date
设计 Designed	刘康平	2018.01.26
校核 Checked	刘强 邵光东	
审核 Reviewed	马骥	
批准 Approved	杨凌	
比例 Scale	1:100	图号 DWG NO. 30-B003701S-T0501-003

工业水池顶面布置图

Top of industrial pool

版本 REV. A

594X841

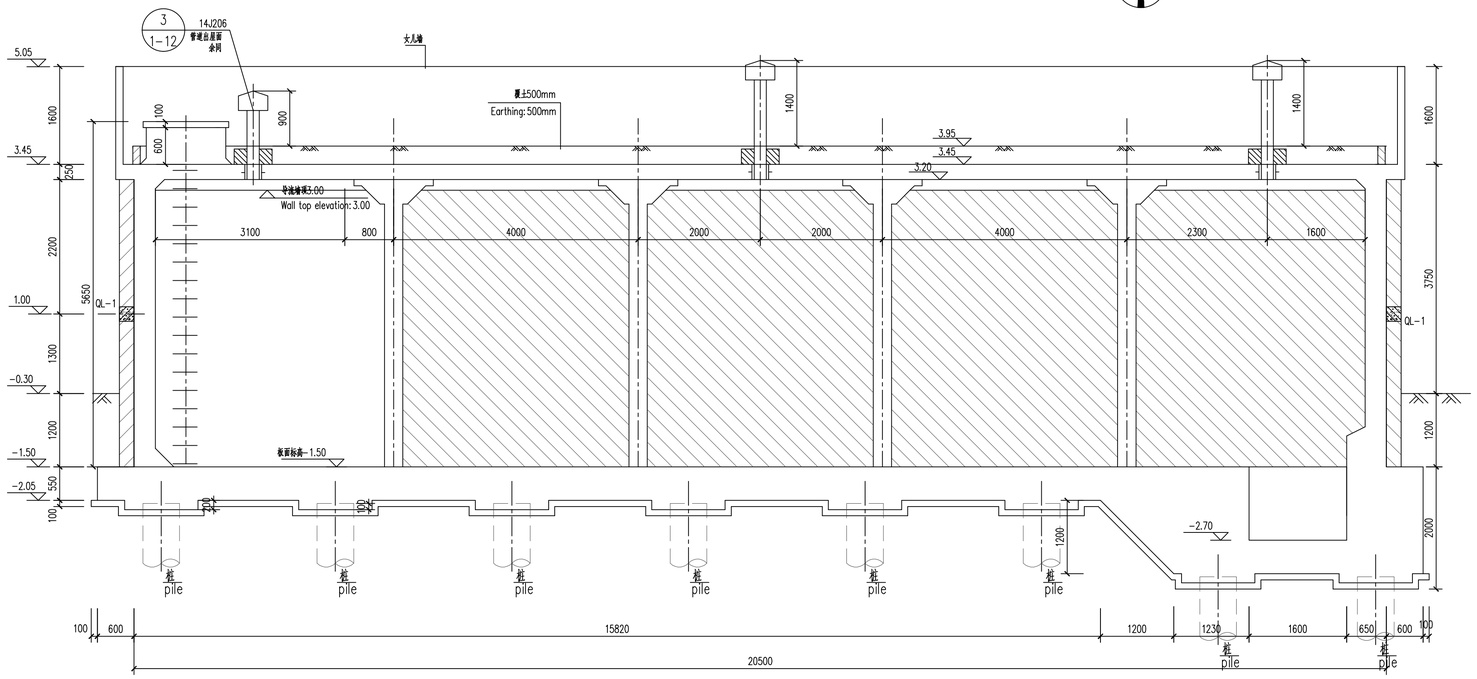

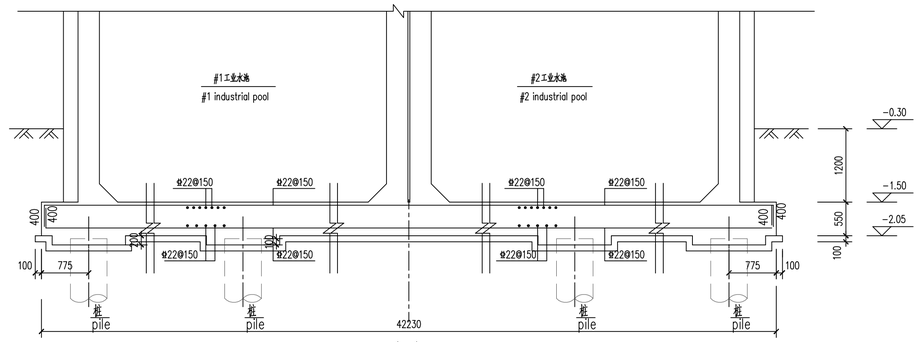

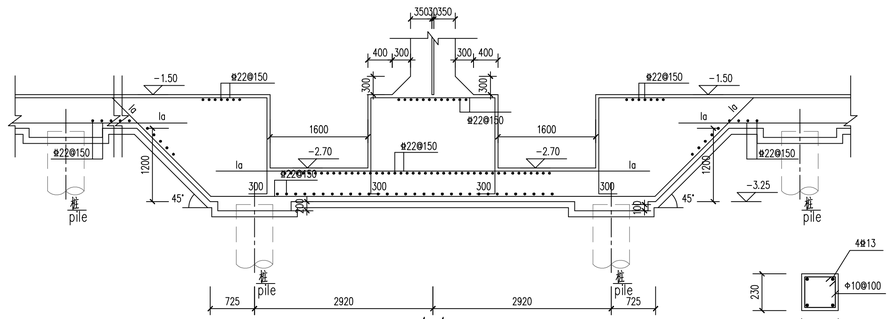

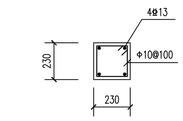

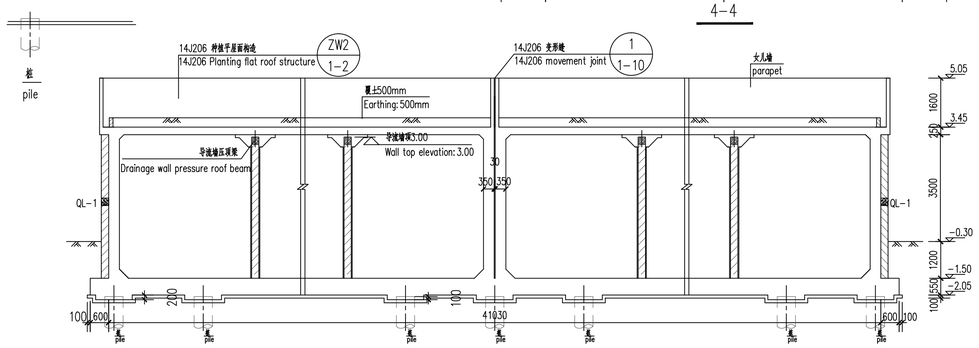

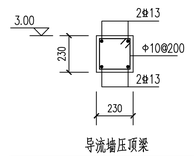

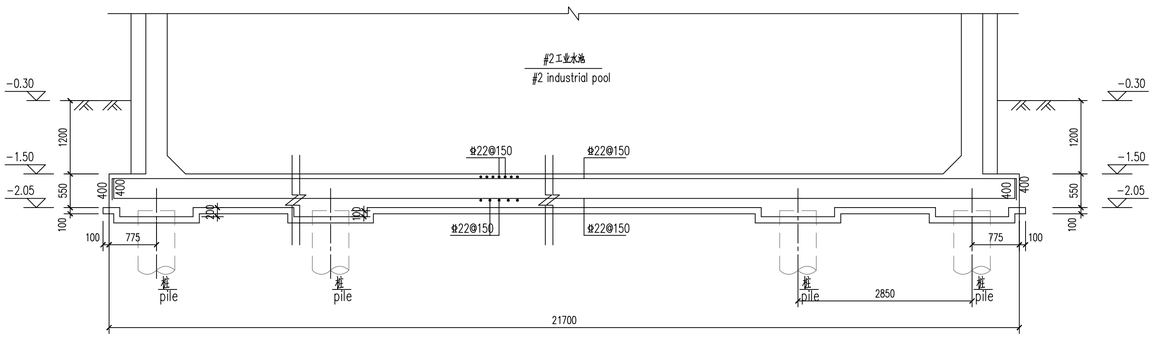

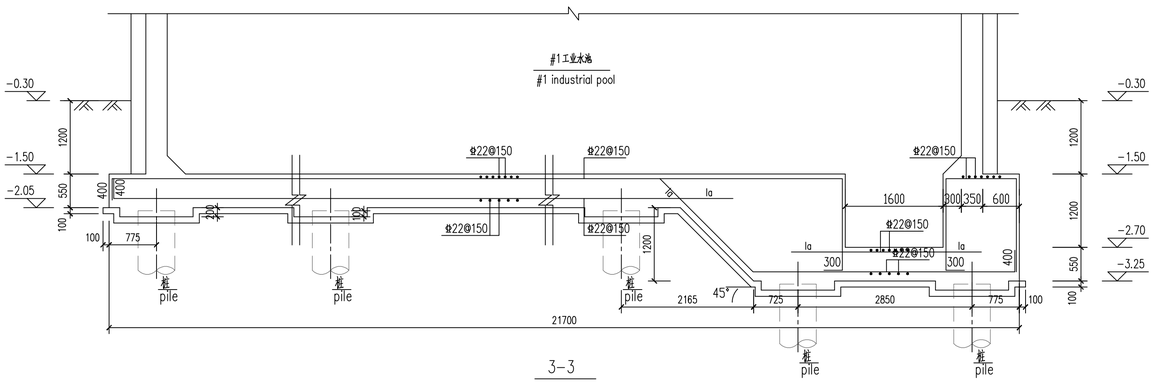

说明：

1.桩伸入承台100mm，桩顶与承台连接详图参见国标图集10SG813。

2.桩为Φ600的机械成孔灌注桩，桩长均为28m，桩数量120根。

3.水池池壁及底板钢筋在集水坑处应伸入坑壁45d，不得截断。

Specification :

1.The pile extends into the pile cap 100mm,Details of connection between pile top and pile cap refer to national standard 10SG813.

2.The pile is a mechanical hole filling pile with a diameter of 600mm.The length of the pile is 28m.The number of piles is 120.

3.The tank wall and floor reinforcement should extend into the pit wall 45d in the sump,and should not be cut off.

Reference Drawings

Drwg. No.	Title

Revisions

Name	Date	Notes

巴基斯坦默蒂亚里—拉合尔±660kV直流输电工程

±660kV HVDC Project from Matiari to Lahore in Pakistan

NATIONAL TRANSMISSION & DESPATCH COMPANY (NTDC) LIMITED PAKISTAN

CONTRACTOR 国家电网 State Grid 中国电力技术装备有限公司 CHINA ELECTRIC POWER EQUIPMENT & TECHNOLOGY CO.,LTD.

SUBCONTRACTOR East China Electric Power Design Institute Co.,Ltd.

拉合尔±660kV换流站

±660kV Lahore Converter Station

设计阶段 PHASE: 施工图 Detail Design

M L H V D C - L C S - E C I - D D - C S - 0 5 0 1 - 0 0 4 A

专业 Speciality	会签 Sign	日期 Date
水工		

	姓名 Name	日期 Date
设计 Designed	刘康宁	2018.01.26
校核 Checked	刘强	
审核 Reviewed	吴傳清	
批准 Approved	杨冷	
比例 Scale	1:100	图号 DWG NO. 30-B003701S-T0501-004

工业水池剖面图

Cross-section of industrial pool

版本 REV. A

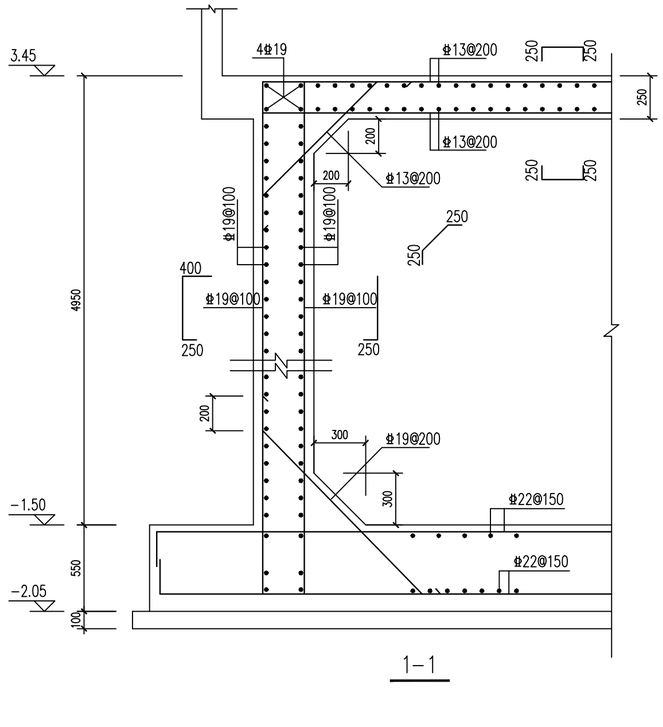

1-1

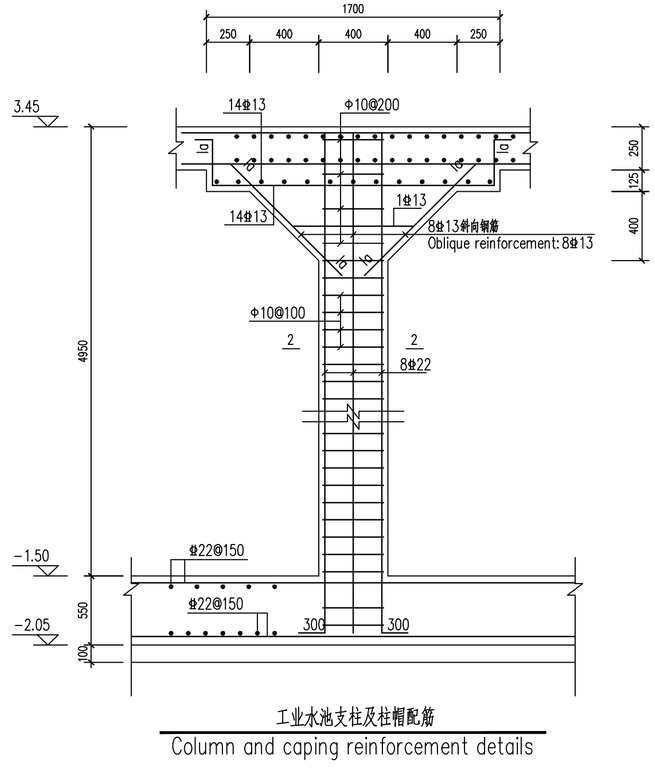

工业水池支柱及柱帽配筋

Column and caping reinforcement details

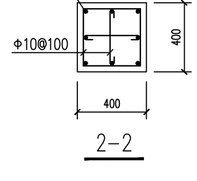

2-2

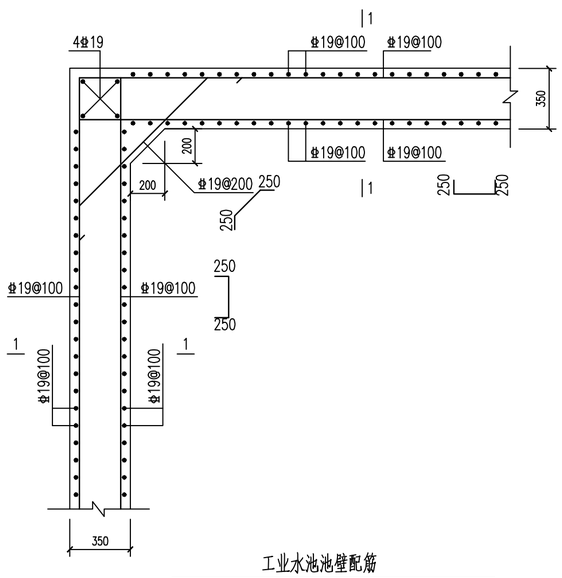

工业水池池壁配筋

Side wall reinforcement details

说明:

1. 工业水池平面尺寸见图2、图3、图4。
2. 池壁内钢筋间设置拉结筋Φ10@600。

Specification:

1. Industrial pool plane size refers to the Drwg.2,Drwg.3,Drwg.4.
2. Reinforcing bars Φ10@600 are arranged between the reinforcing bars in the wall of the pool wall.

水工		
专业 Speciality	会签 Sign	日期 Date

Reference Drawings

Drwg. No.	Title

Revisions

	Name	Date	Notes

巴基斯坦默蒂亚里—拉合尔±660kV直流输电工程

±660kV HVDC Project from Matiari to Lahore in Pakistan

NATIONAL TRANSMISSION & DESPATCH COMPANY (NTDC) LIMITED PAKISTAN

CONTRACTOR 国家电网 STATE GRID 中国电力技术装备有限公司 CHINA ELECTRIC POWER EQUIPMENT AND TECHNOLOGY CO.,LTD.

SUBCONTRACTOR East China Electric Power Design Institute Co.,Ltd.

拉合尔±660kV换流站

±660kV Lahore Converter Station

设计阶段 PHASE: 施工图 Detail Design

M L H V D C - L C S - E C I - D D - C S - 0 5 0 1 - 0 0 5 A

	姓名 Name	日期 Date
设计 Designed	刘康华	2018.01.26
校核 Checked	刘晓 张昌勇	
审核 Reviewed	邹雪清	
批准 Approved	李和平	
比例 Scale	1:25	图号 DWG NO.

工业水池配筋图

Industrial pool reinforcement details

30-B003701S-T0501-005

版本 REV. A

Autodesk
420X594

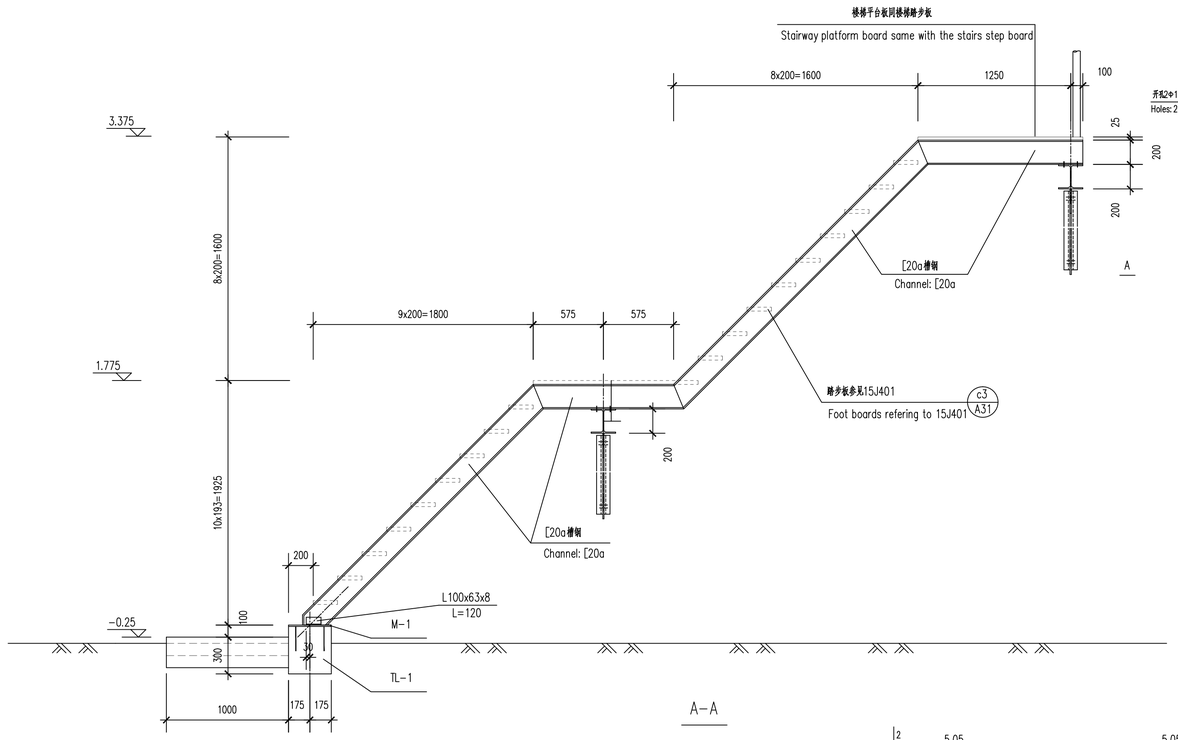

A-A

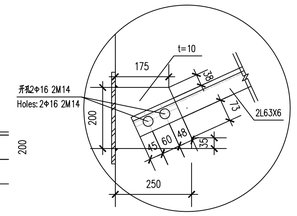

4

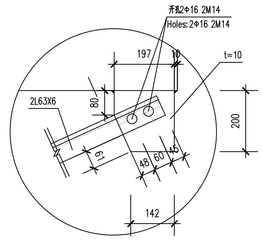

5

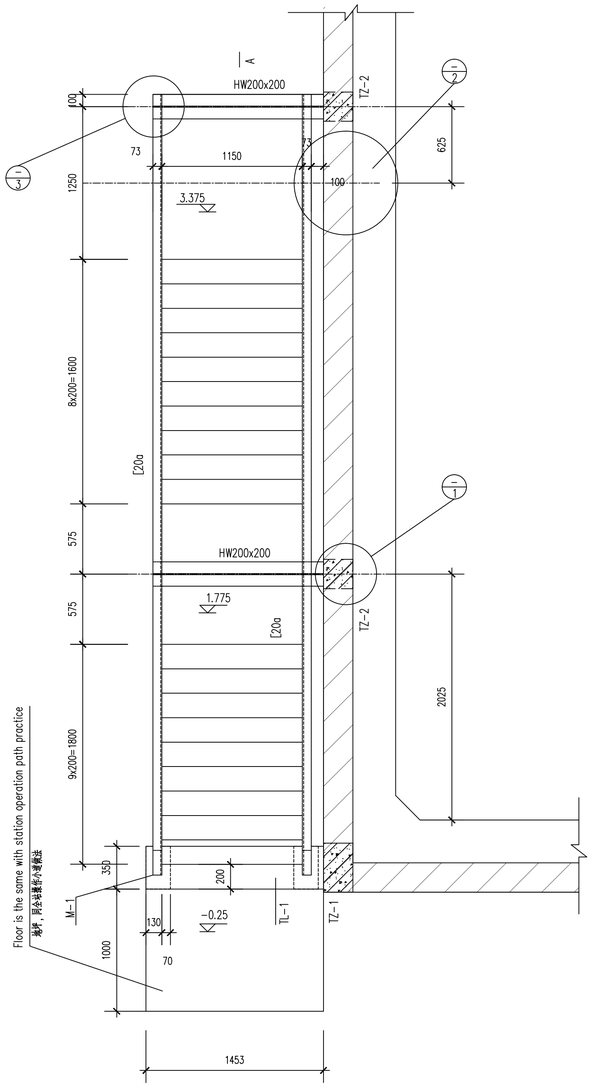

钢梯平面布置图

Ladder layout

说明：

1.楼梯节点参见国标图集15J401。

2.所有构件均热镀锌防腐，现场焊接处刷富锌环氧二道。

3.焊缝高度不小于8mm，埋件焊缝要求满焊。

4.栏杆做法参见国标15J401第15页。

5.楼梯平台处女儿墙做开口，具体位置参见03图。

Specification：

1.Stairway nodes refer to National standard Atlas 15J401.

2.All components are hot galvanized anti-corrosion.Field welding zinc-rich epoxy two brush.

3.Bead height is not less than 8mm.Embedded parts fully welded seam claim.

4.Railing practices refer to National standard Atlas 15J401,Page 15.

5.Make Opening at the parapet landing,the specific location refers to Drwg.03.

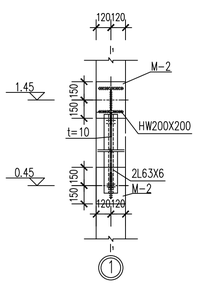

1

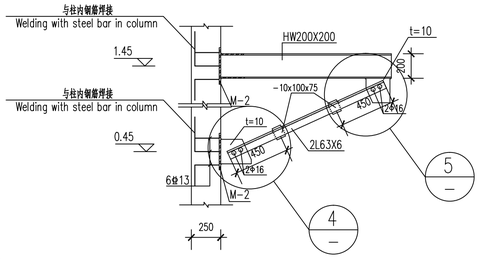

1-1

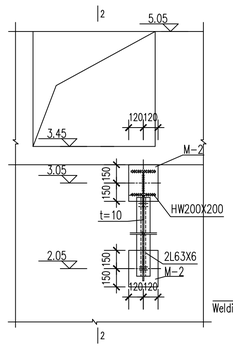

2

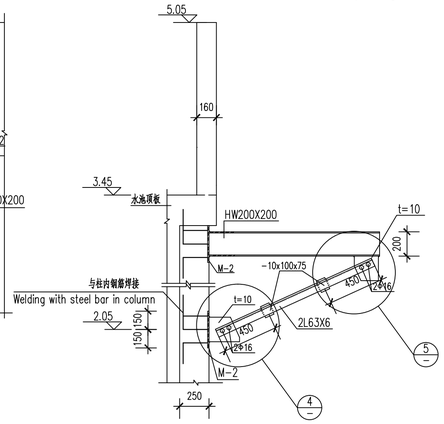

2-2

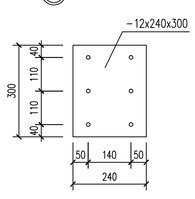

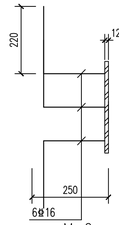

M-2

共4块

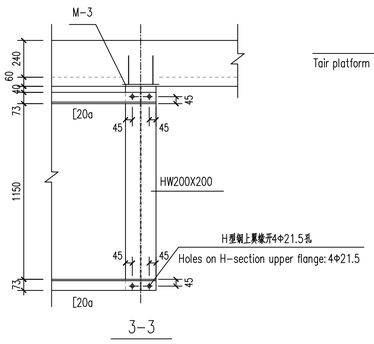

3-3

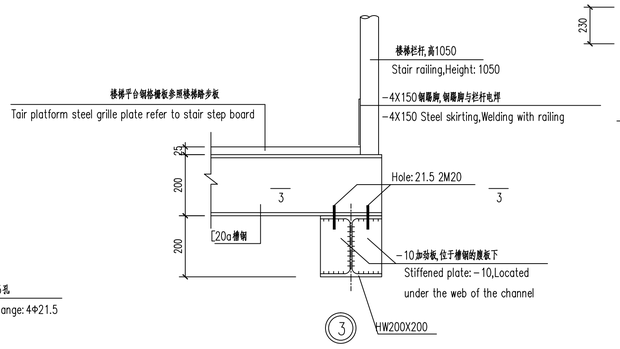

3

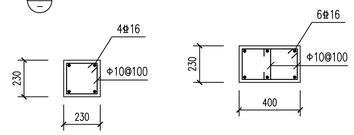

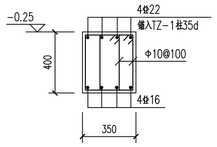

TL-1

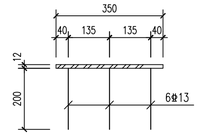

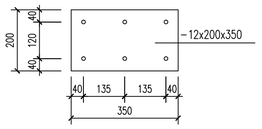

M-1

Reference Drawings

Drwg. No.	Title

Revisions

Name	Date	Notes

巴基斯坦默蒂亚里—拉合尔±660kV直流输电工程

±660kV HVDC Project from Matiari to Lahore in Pakistan

NATIONAL TRANSMISSION & DESPATCH COMPANY (NTDC) LIMITED PAKISTAN

CONTRACTOR 国家电网 STATE GRID 中国电力技术装备有限公司 CHINA ELECTRIC POWER EQUIPMENT AND TECHNOLOGY CO.,LTD.

SUBCONTRACTOR East China Electric Power Design Institute Co.,Ltd.

拉合尔±660kV换流站

±660kV Lahore Converter Station

设计阶段 PHASE: 施工图 Detail Design

M L H V D C - L C S - E C I - D D - C S - 0 5 0 1 - 0 0 6 A

	姓名 Name	日期 Date
设计 Designed	刘康宁	2018.01.26
校核 Checked	刘振 邹志东	
审核 Reviewed	吴德清	
批准 Approved	杨治	

钢梯图

Ladder details

水工		
专业 Speciality	会签 Sign	日期 Date

比例 Scale: 1:50

图号 DWG NO.: 30-B003701S-T0501-006

版本 REV.: A

594X841